# CENTURY

## LIGHTING | ART | DESIGN

joekrauslighting

301-537-5808 joe@joekrauslighting.com www.joekrauslighting.com

# The Promenade

NOTES:
1)METAL: ALL EXPOSED METAL FINISH TO BE BRONZE PAINTED COLOR
2)SHADE: MILK WHITE ACRYLIC.
3)LAMPING: INTEGRATED LED 16W(1200LMS) 2700K. DIMMABLE.120V.AC. 60Hz W/DRIVER@WALL CANOPY
4)HARD WIRED. SUITABLE FOR INDOOR(DRY)LOCATION USE
UL/CUL APPROVED
***APPROX MAX. WEIGHTS: 12LBS

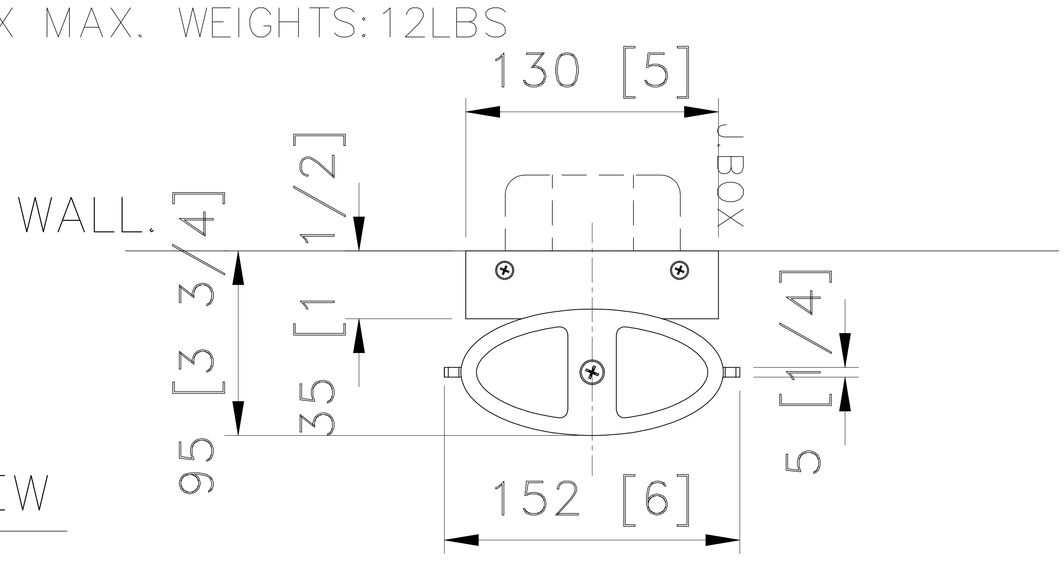


TOP VIEW

SCALE: 1 : 7

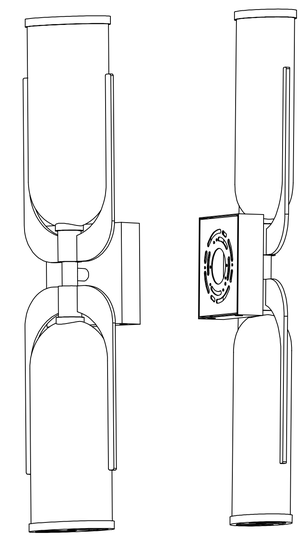

3D VIEW

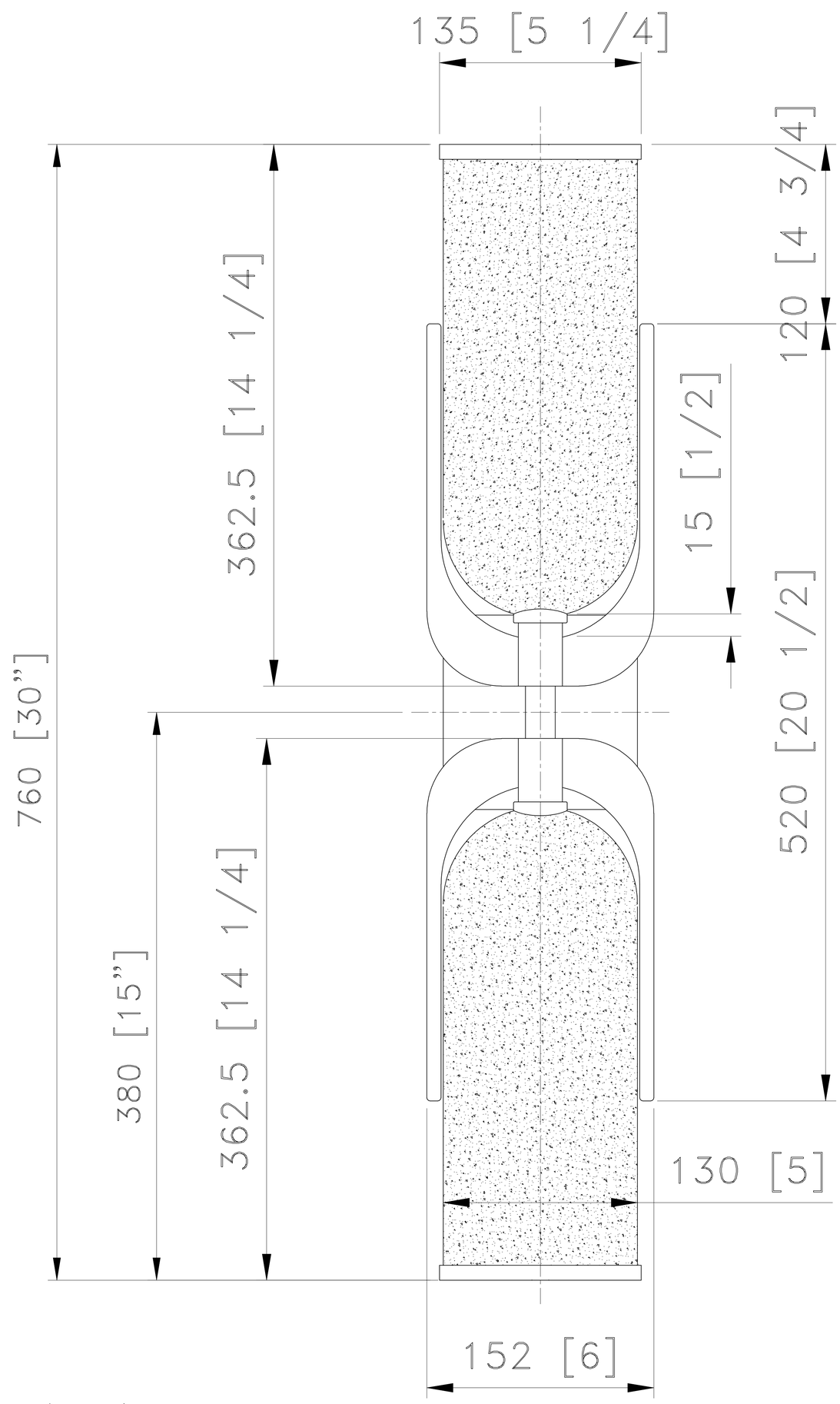


front view

SCALE: 1 : 7

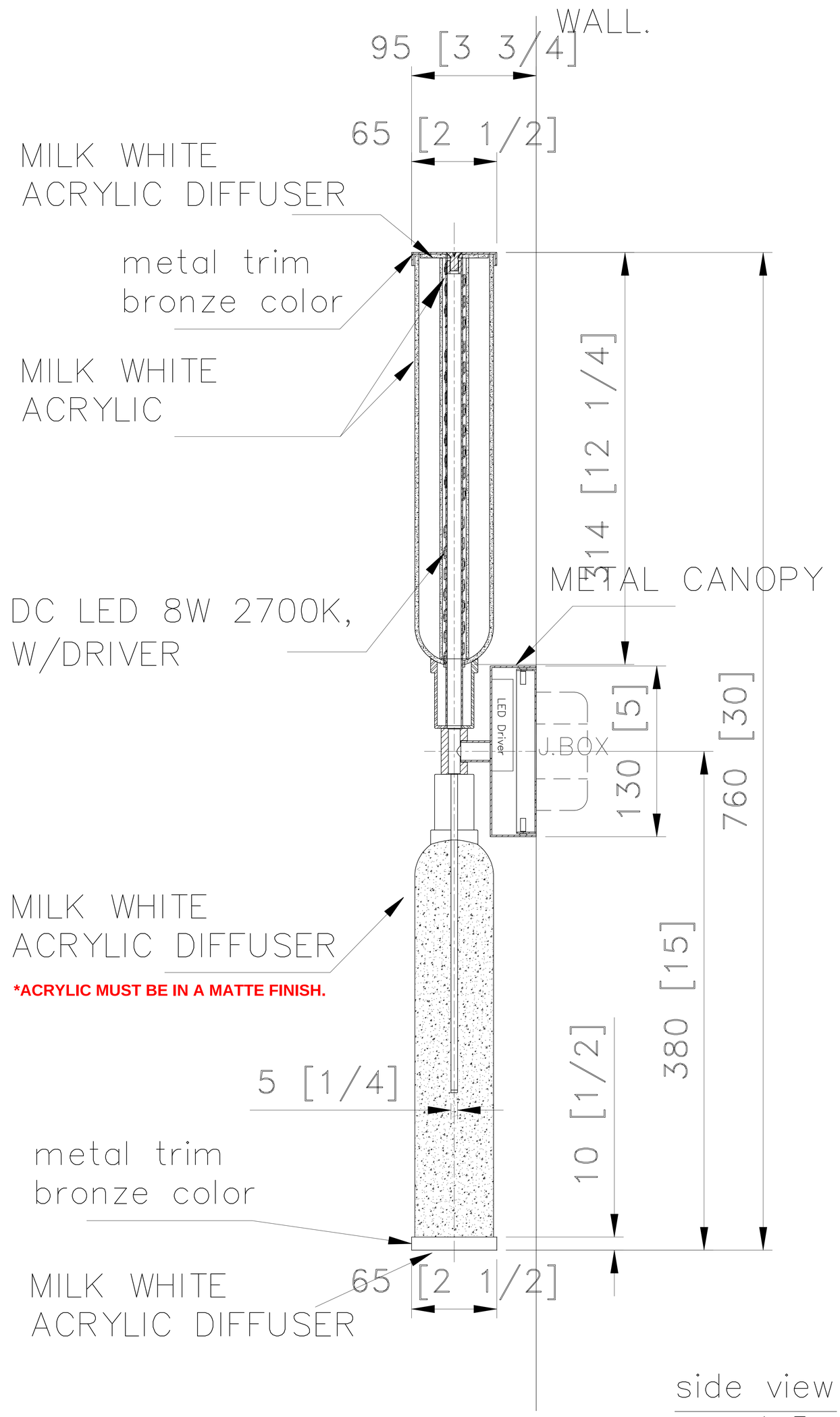


side view

SCALE: 1 : 7

**CUSTOM WALL SCONCE**

ITEM NO:WS-01 QTY: 32pcs

**Promenade Multifamily**

**Approval:** PH & AL **Date:** 01.13.2025

**With comments:** *ACRYLIC SHADE & DIFFUSER MUST BE IN A MATTE FINISH.

**Signed By:** ANNA LOMAX

Estimated Leads time are contingent upon receiving approved submittals and are subject to change


Les Industries CENTURY Industries Inc.
5645 Royalmount Ave.
Montreal, Quebec, Canada H4P 2P9
Tel:514-842-3933 Fax:514-842-7481
Toll free Canada only:1-877-842-3934


Dwg. #

Date: 2024/07/05 (yyyy/mm/dd) Rev: 2024/10/04 (yyyy/mm/dd)

P 1/1

NORTH TOWER

NOTES:
1)METAL: ALL EXPOSED METAL FINISH TO BE BRONZE PAINTED COLOR
2)DIFFUSER: FROSTED WHTIE ACRYLICS@BOTTOM OF METAL SHADE
3)LAMPING: INTEGRATED LED 17.5W–1750LMS 2700K,CRI 90+ (UPLIGHT),~~ELV DIMMING~~,120V OR 277V,.A.C.60Hz.DRIVERLESS
INTEGRATED LED 35W–3500LMS,2700K,CRI 90+ (DOWNLIGHT),ELV DIMMING,120V OR 277V,A.C.60Hz.DRIVERLESS
4)HARD WIRED. SUITABLEFOR INDOOR(DRY)LOCATION USE
UL/CUL APPROVED
***APPROX MAX. WEIGHTS: 45LBS

OUR FIXTURE CANNOT BE DIMMABLE ANYMORE DUE TO THE COST IMPLICATIONS TO UPDATE THE SWITCHING.

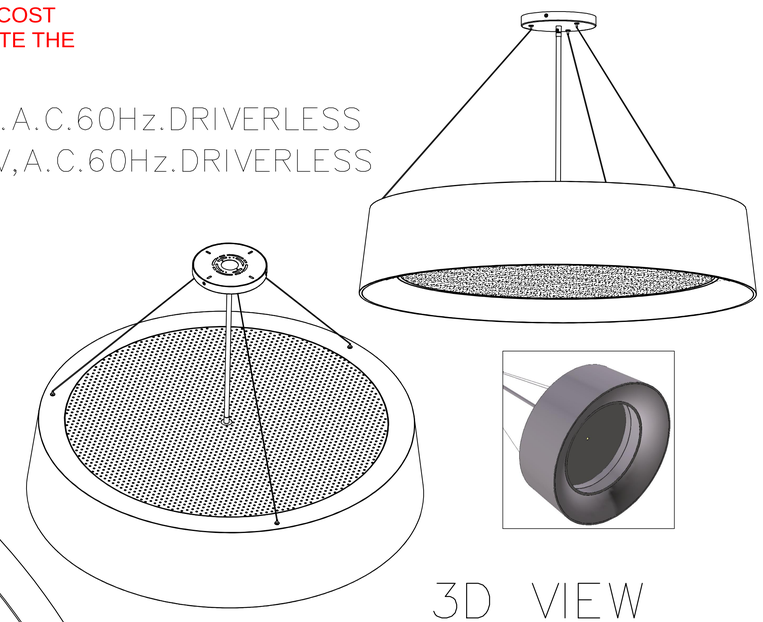

3D VIEW

TOP VIEW

SCALE: 1 : 11

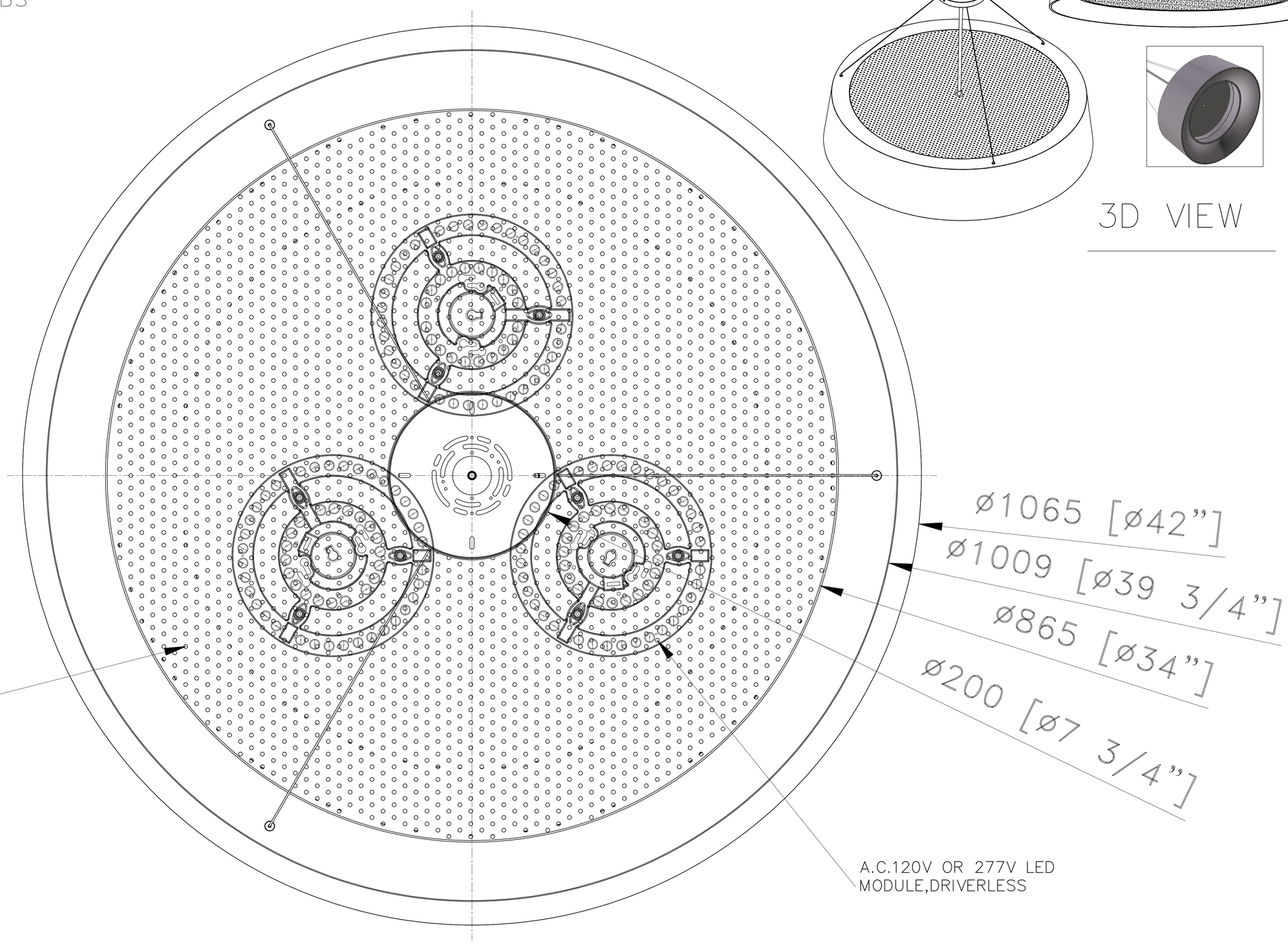


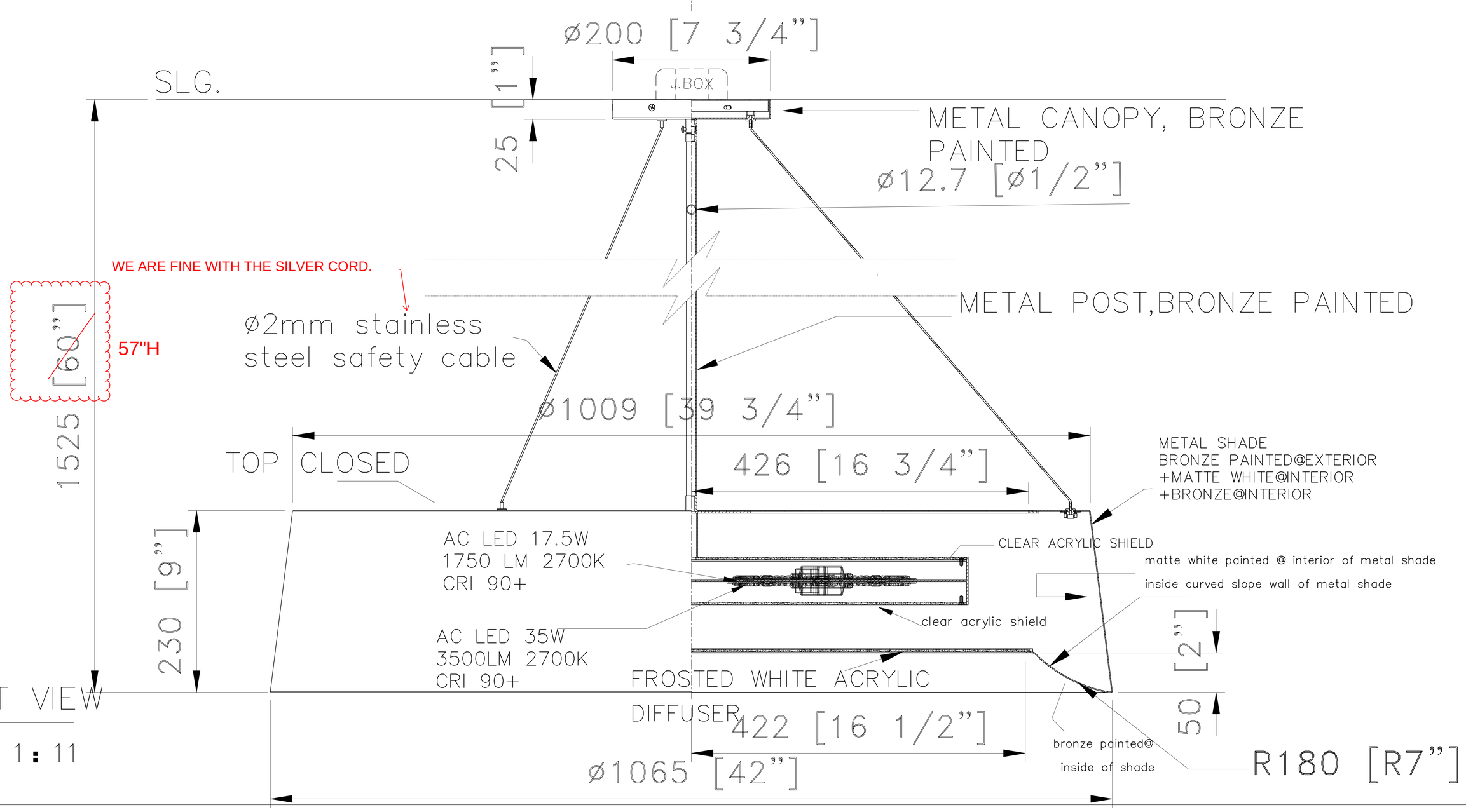


FRONT VIEW

SCALE: 1 : 11

**CUSTOM PENDANT LIGHT**

**Promenade Multifamily**

ITEM NO:PL-01 QTY: 14pcs

**Approval:** ☐ **Date:** _____

**With comments:** _____

**Signed By:** _____

**Estimated Leads time are contingent upon receiving approved submittals and are subject to change**


**Les Industries CENTURY Industries Inc.**
5645 Royalmount Ave.
Montreal, Quebec, Canada H4P 2P9
**Tel:**514-842-3933 **Fax:**514-842-7481
Toll free Canada only:1-877-842-3934


**Dwg. #**

Date:2024/06/22 (yyyy/mm/dd) Rev:2025/03/11 (yyyy/mm/dd)

P 1/1

NOTES:

1)METAL: ALL EXPOSED METAL FINISH TO BE BRONZE PAINTED COLOR

2)SHADE: ~~MILK~~ WHITE ACRYLIC.

CHANGE TO FROSTED ACRYLIC

3)LAMPING: INTEGRATED LED ~~20W~~ 2700K.NON-DIMMABLE ~~.120V.AC.~~ 60Hz W/DRIVER@WALL CANOPY.

15W (1500 LMS)

UNIVERSAL DRIVER

4)HARD WIRED. SUITABLE FOR INDOOR(DRY)LOCATION USE UL/CUL APPROVED

***APPROX MAX. WEIGHTS: 8LBS

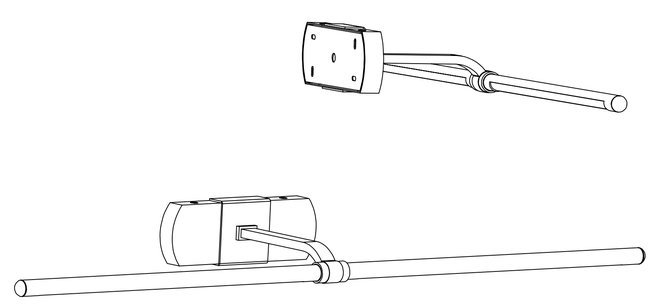

3D VIEW

*ENSURE 90 CRI FOR FIXTURE

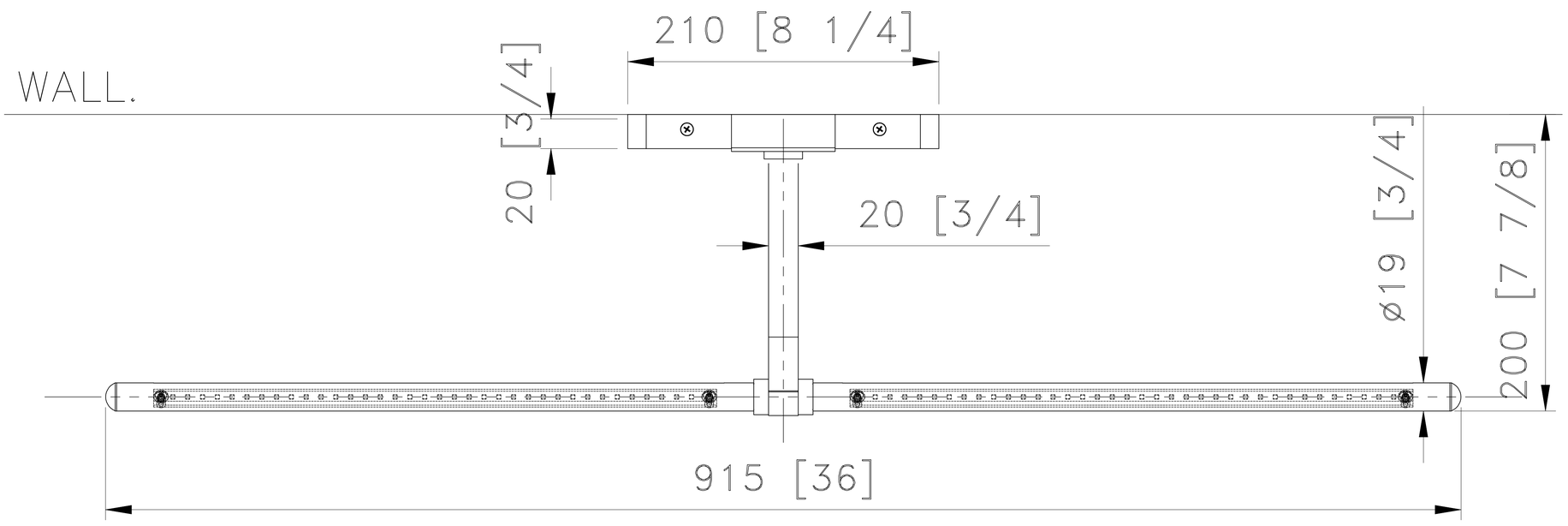


TOP VIEW

SCALE: 1 : 7

*PLEASE ENSURE THERE ARE NO VISIBLE SCREWS ON THE EXTERIOR OF THIS FIXTURE.

*PLEASE PROVIDE THE DELIVERED LUMENS COUNT FOR THIS FIXTURE ON THE NEXT SUBMITTAL.

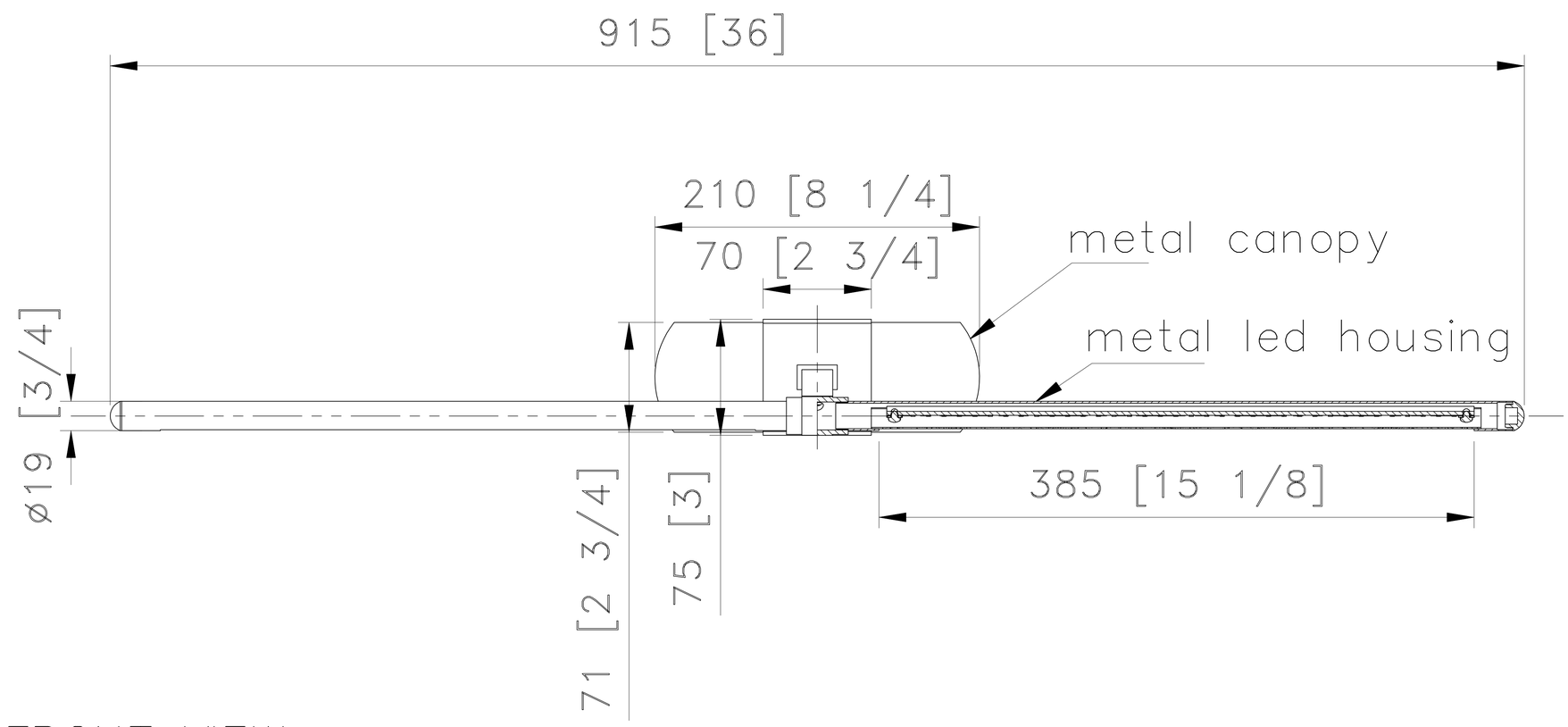


FRONT VIEW

SCALE: 1 : 7

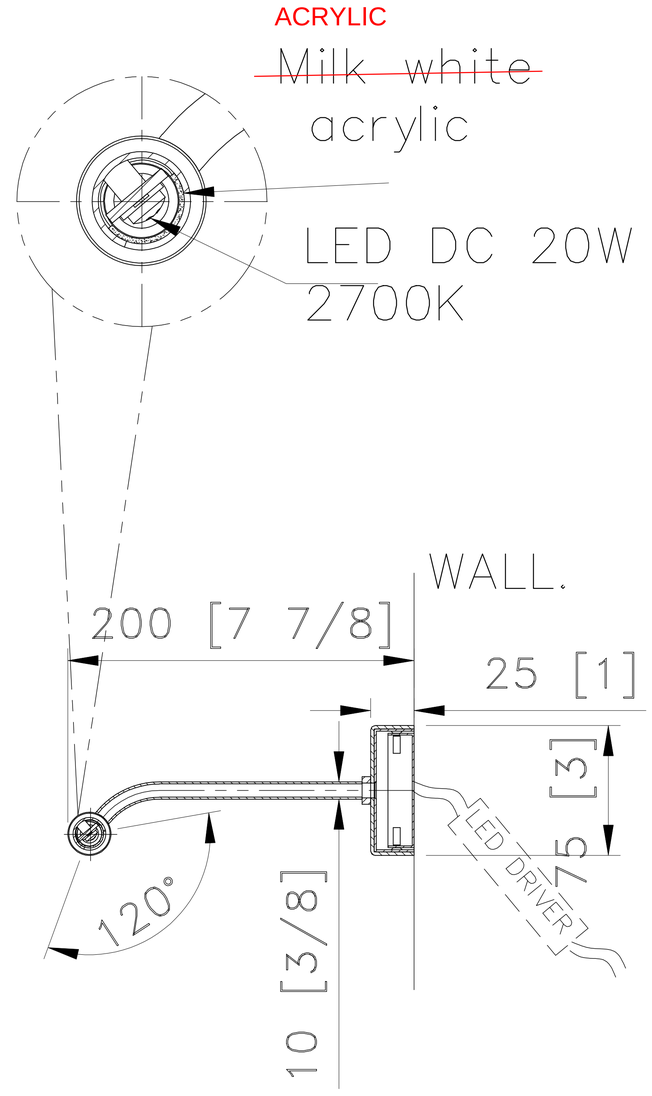


SIDE VIEW

SCALE: 1 : 7

**CUSTOM PICTURE WALL LIGHT**

ITEM NO:WS-05 QTY: 16pcs

**PROMENADE MULTIFAMILY**

**Approval:** ☐ **Date:** _____

**With comments:** _____

**Signed By:** _____

**Estimated Leads time are contingent upon receiving approved submittals and are subject to change**


**Les Industries CENTURY Industries Inc.**
5645 Royalmount Ave.
Montreal, Quebec, Canada H4P 2P9
**Tel:**514-842-3933 **Fax:**514-842-7481
Toll free Canada only:1-877-842-3934


Date: 2024/10/13 (yyyy/mm/dd) Rev: _____ (yyyy/mm/dd)

Dwg. #

P 1/1

16
ELEVATOR
2

NOTES:
1)METAL: ALL EXPOSED METAL FINISH TO BE Painted finish in Bronze
2)SHADE: FROSTED WHITE ACRYLIC.
3)LAMPING: INTEGRATED LED 8W 2700K.DIMMABLE.120V.AC. 60Hz DRIVERLESS
4)HARD WIRED. SUITABLE FOR INDOOR(DRY)LOCATION USE
UL/CUL APPROVED
***APPROX MAX. WEIGHTS: 7LBS

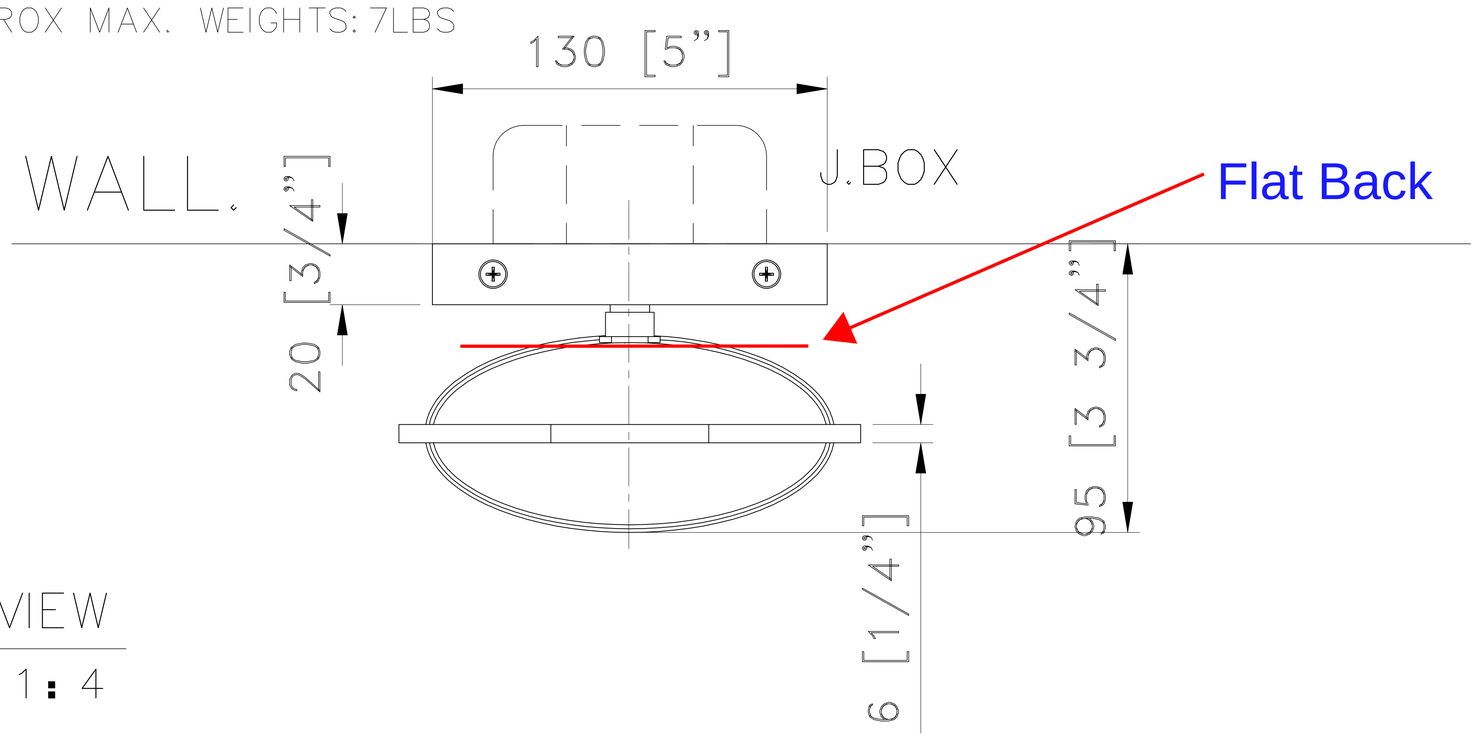


TOP VIEW
SCALE: 1 : 4

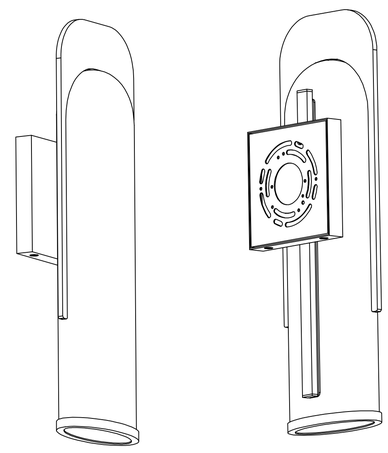

3D VIEW

Separate the acrylic from the metal similar to the image

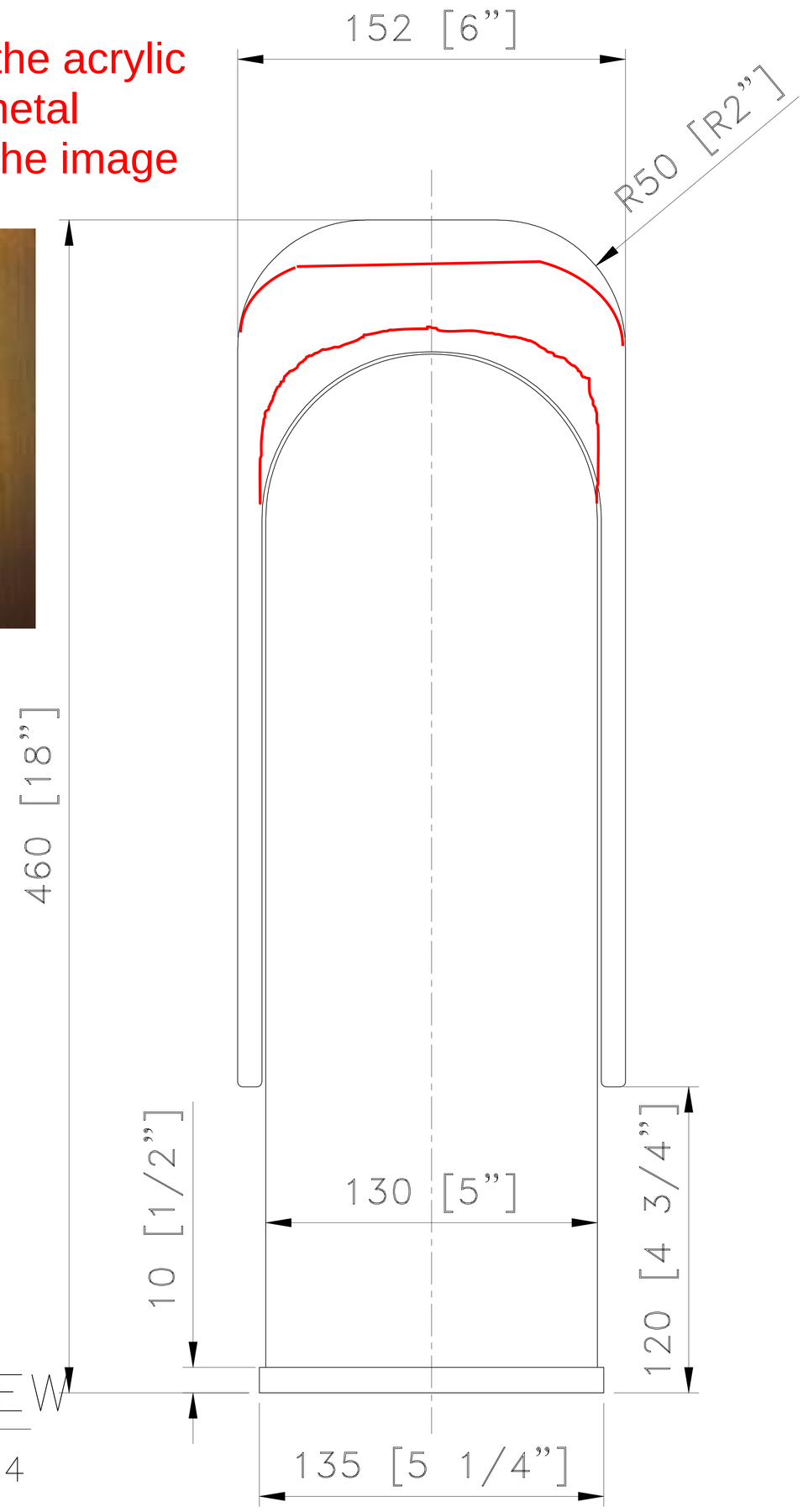


SIDE VIEW
SCALE: 1 : 4

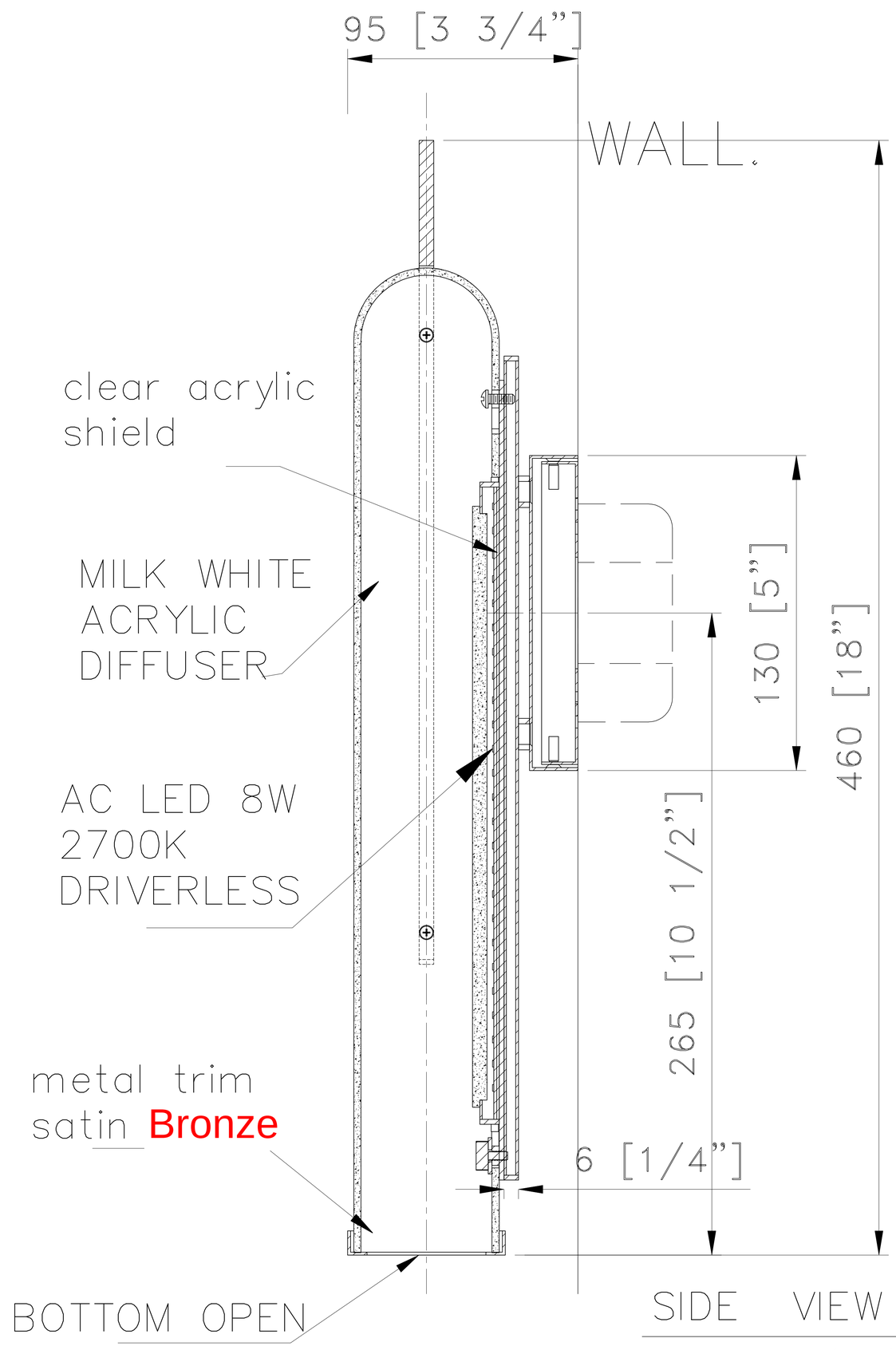


SIDE VIEW
SCALE: 1 : 4

**CUSTOM WALL SCONCE**

ITEM NO:WS-03 QTY: 5pcs

**Promenade Multifamily**

**Approval:** ☐ **Date:** _____

**With comments:** _____

**Signed By:** _____

**Estimated Leads time are contingent upon receiving approved submittals and are subject to change**


**Les Industries CENTURY Industries Inc.**
5645 Royalmount Ave.
Montreal, Quebec, Canada H4P 2P9
**Tel**:514-842-3933 **Fax**:514-842-7481
Toll free Canada only:1-877-842-3934


Dwg. #

Date: 2024/06/22 (yyyy/mm/dd) Rev: _____ (yyyy/mm/dd)

P 1/1

NOTES:

1)METAL: ALL EXPOSED METAL FINISH TO BE BRONZE COLOR

2)SHADE: CLEAR ACRYLIC RODS

3)DIFFUSER: FROSTED WHITE ACRYLIC

4)LAMPING: INTEGRATED LED 16W 2700K.CRI 90+ ~~DIMMABLE.~~
W/DRIVER @CANOPY, 120V–277V.A.C. 60Hz

5)HARD WIRED. SUITABLE FOR INDOOR(DRY)LOCATION USE
UL/CUL APPROVED

***APPROX MAX. WEIGHTS: 12LBS

OUR FIXTURE CANNOT BE DIMMABLE ANYMORE DUE TO THE COST IMPLICATIONS TO UPDATE THE SWITCHING.

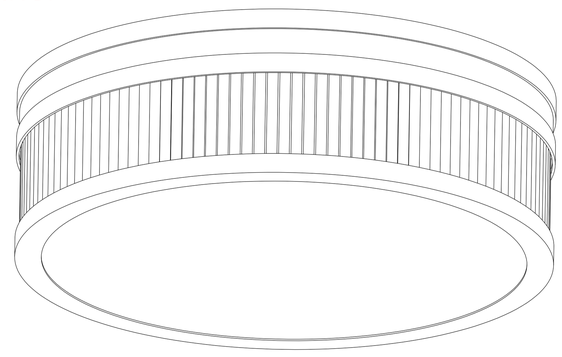

3D VIEW

TOP VIEW

SCALE: 1 : 4

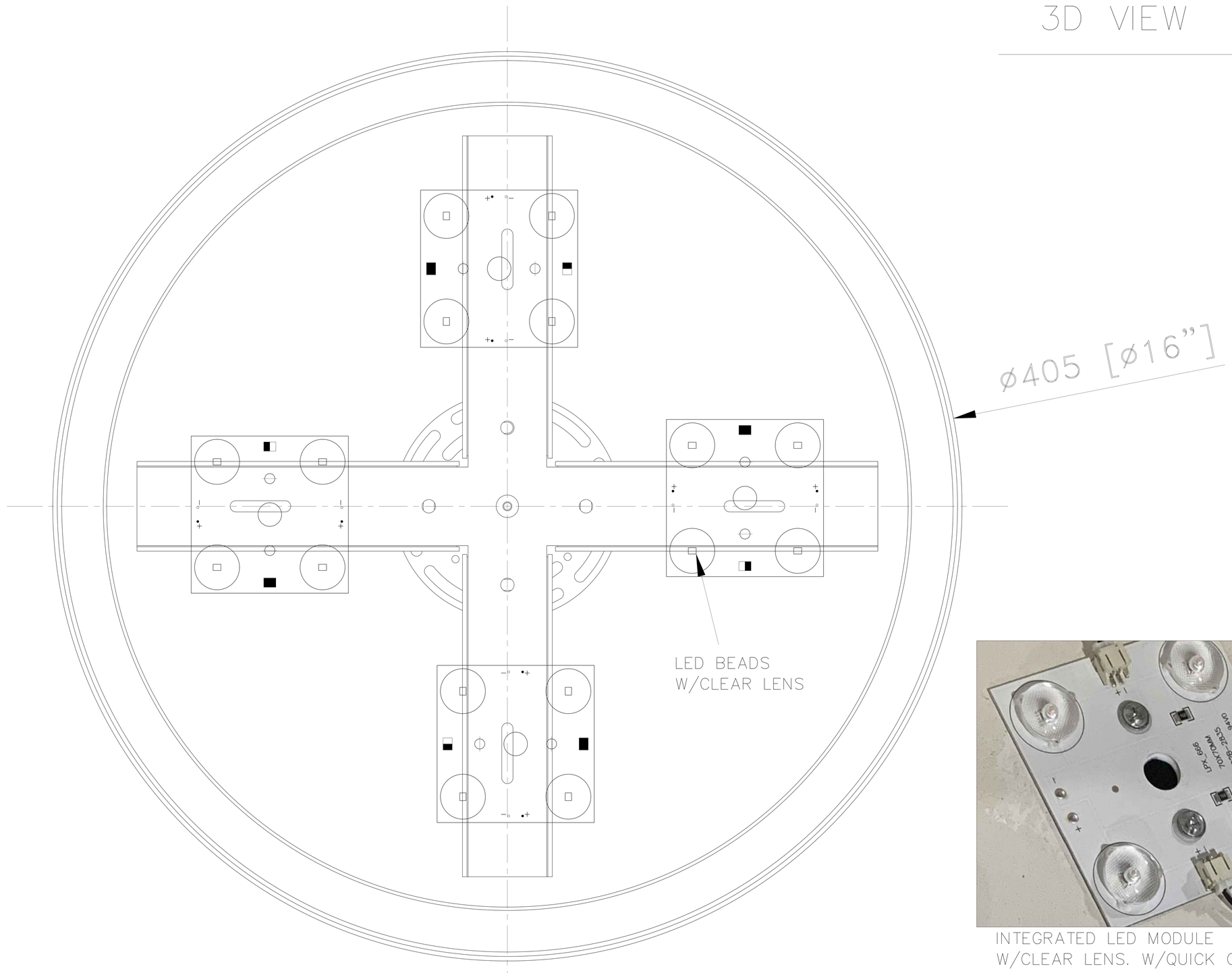

INTEGRATED LED MODULE
W/CLEAR LENS. W/QUICK CONNECTOR

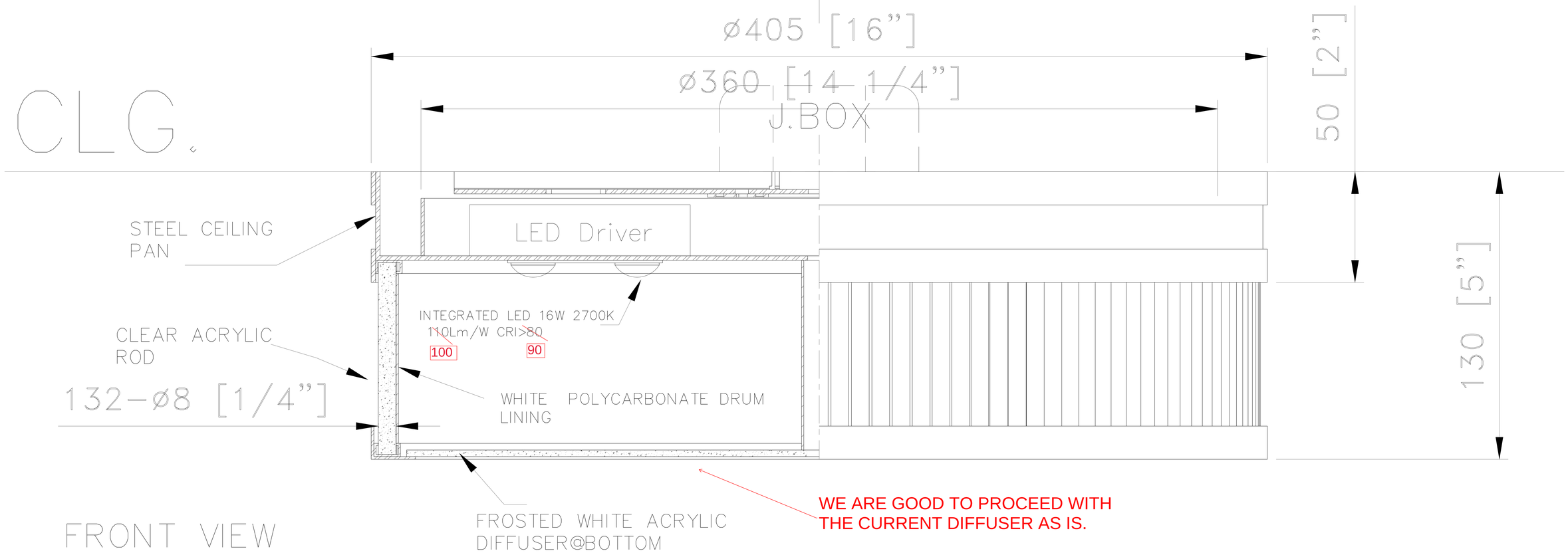


FRONT VIEW

SCALE: 1 : 4

CUSTOM FLUSH MOUNT LIGHT

ITEM NO:SM-01 QTY: 6pcs

Promenade Multifamily

Approval: Date:

With comments:

Signed By:

Estimated Leads time are contingent upon receiving approved submittals and are subject to change


Les Industries CENTURY Industries Inc.
5645 Royalmount Ave.
Montreal, Quebec, Canada H4P 2P9
Tel:514-842-3933 Fax:514-842-7481
Toll free Canada only:1-877-842-3934


Dwg. #

Date: 2024/06/22 (yyyy/mm/dd) Rev: 2025/03/18 (yyyy/mm/dd)

P 1/1