El Sol CUSTOM LIGHTING

ElSol
CUSTOM
LIGHTING
ElSolCustomLighting.com

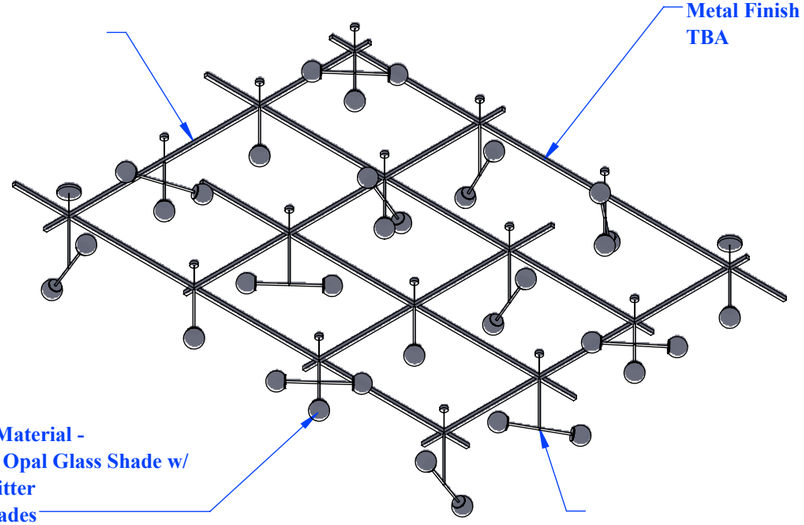

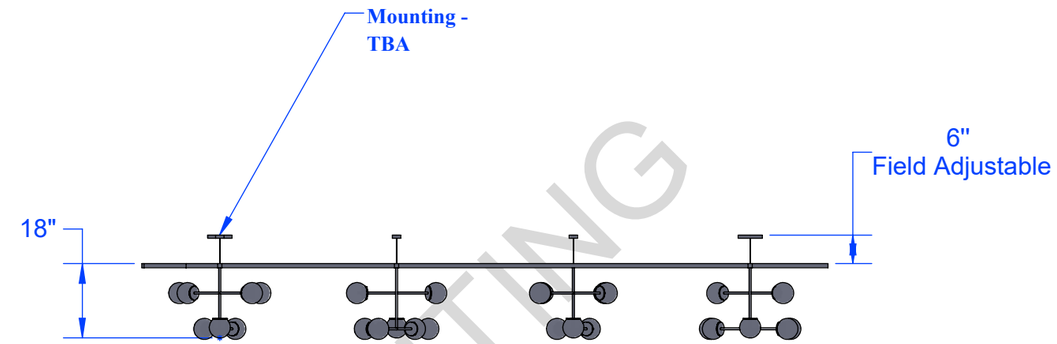

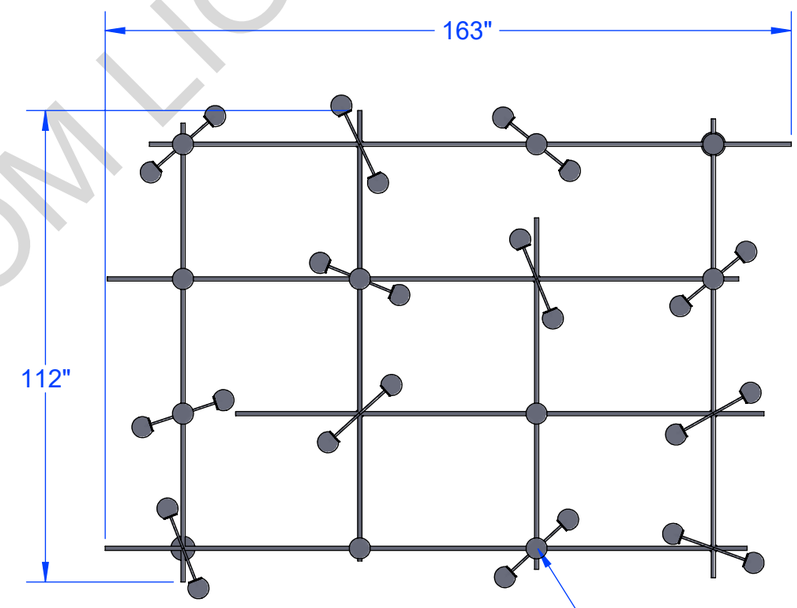

EL SOL CUSTOM LIGHTING

CUSTOMER NAME: EL SOL CUSTOM LIGHTING	
QUOTE# EL SOL CUSTOM LIGHTING	QUANTITY: EL SOL CUSTOM LIGHTING
PO: EL SOL CUSTOM LIGHTING	BASE DESIGN NAME OR NUMBER: EL SOL
DESCRIPTION OF CUSTOM REQUIREMENTS:	
COSMETIC PARAMETERS	TECHNICAL PARAMETERS:
METAL FINISH: EL SOL CUSTOM LIGHTING	WATTAGE: EL SOL CUSTOM LIGHTING
WOOD FINISH: EL SOL CUSTOM LIGHTING	CONNECTION TYPE: EL SOL CUSTOM LIGHTING
SHADE MATERIAL: EL SOL CUSTOM LIGHTING	THIS PRODUCT IS UL/CUL APPROVED
ADDITIONAL PIECES, PARTS, OR NOTES:	

EL SOL RESERVES THE RIGHTS TO MAKE MINOR CHANGES TO THIS DRAWING AS REQUIRED BY PRODUCTION CONSTRAINTS.

SIGNATURES:

ENGINEERING:

MANUFACTURING:

ELECTRICAL:

PRODUCTION:

UNLESS OTHERWISE SPECIFIED:
UNITS: INCHES [MILLIMETERS]
TOLERANCES ARE:
X.XX [X.X] = ± 0.06"
X.XXX [X.XX] = ± 0.02"
ANGLES ± 3°

PROPRIETARY AND CONFIDENTIAL
THE INFORMATION CONTAINED IN THIS DRAWING IS THE SOLE PROPERTY OF EL SOL CUSTOM LIGHTING. ANY REPRODUCTION IN PART OR AS A WHOLE WITHOUT THE WRITTEN PERMISSION OF EL SOL CUSTOM LIGHTING IS PROHIBITED.

MODELED AND DETAILED BY: PT — DATE ----------
APPROVED BY: — DATE

T: 269 281 0435
E: info@elsolcustomlighting.com
A: 3909 Stone Park,
St Joseph MI 49085

DRAWING TITLE: EL SOL CUSTOM LIGHTING

SIZE A — DOCUMENT NUMBER — FILE NAME: — REV. A
SCALE: 1:36 — DO NOT SCALE DRAWING — SHEET 1 OF 2

DRAWING/PART NO.:

DRAWING REVISION RECORD

REV.	DESCRIPTION	REV BY	DATE
A	INITIAL RELEASE OF PRINT FOR DEVELOPMENT.	PT	

joekrauslighting 301-537-5808 joe@joekrauslighting.com www.joekrauslighting.com